B.-Tech - sem-I, (2014, course) IT winter-2018

B.Tech. SEM -I (Chemical/ Civil/ Electrical/ Mechanical/ Production/ Computer/ Info. Tech./ Electronics / Bio Medical / E & TC) 2014 Course (CBCS) : WINTER - 2018

SUBJECT: ENGINEERING GRAPHICS

Day: Saturday **W-2018-2261** Time: 10.00 AM TO 02.00 PM

Date: 24/11/2018 Max. Marks: 60

N.B:

1) All questions are **COMPULSORY.**
2) Figures to the right indicate **FULL** marks. .
3) Draw neat labeled diagrams **WHEREVER** necessary.
4) Assume suitable data if necessary.

Q.1 A link OA, 100mm long rotates about O in clockwise direction. A point 'P' moves with uniform velocity on a link, starting from 'O' reaches to A and comes back to O when link rotates through $1\frac{1}{2}$ revolutions. Trace the path of point P. **(10)**

OR

Q.1 Two fixed points C and D are 100 mm apart. Trace the complete path of point 'P' moving in same plane in such way that the sum of its distances from C and D is always the same equal to 125mm. Name the curve **(10)**

Q.2 Shows a pictorial view of a bracket. Using first angle metod of projection draw the following views: **(10)**

i) Sectional front view looking in direction X
ii) Top view
iii) Left side view and
iv) Give all necessary dimensions

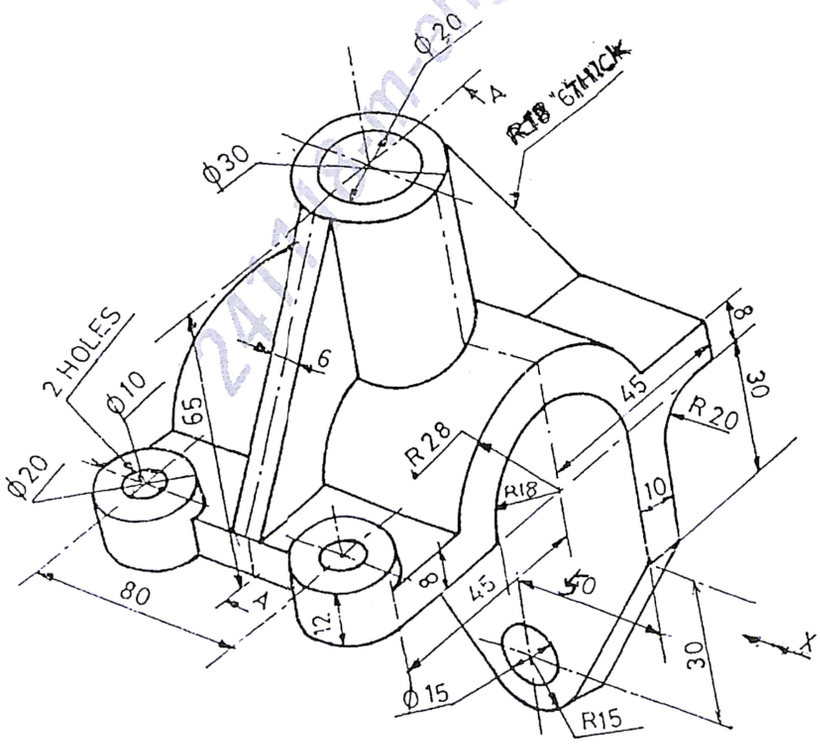

P.T.O.

OR

Q.2 A pictorial view of a bracket is given in Fig. Draw by first angle method of projection, **(10)**

i) Sectional front view looking in direction X (section plane A-A)

ii) Top View. Give necessary dimensions

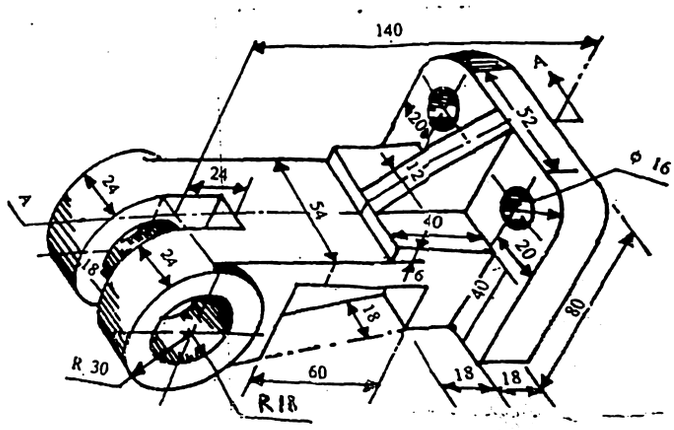

Q.3 For the object shown in figure draw an isometric view taking 'O' as origin. **(10)**

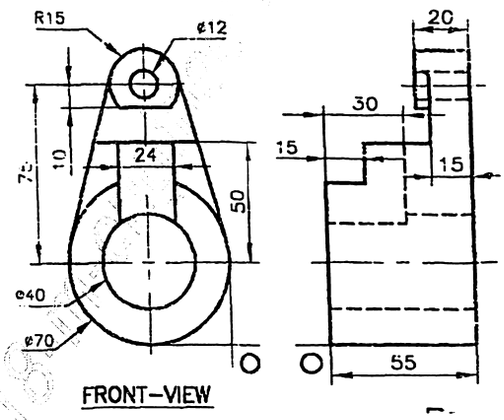

OR

Q.3 For the two views of the object shown below draw its isometric view. **(10)**

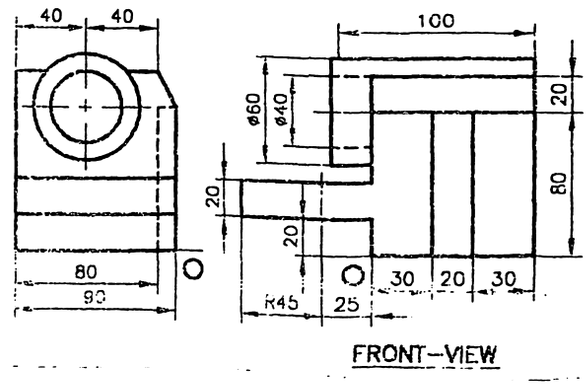

Q.4 The end A of the line AB 105mm long is 20mm above HP and 35mm infront of VP. The elevation of the line is inclined at 45^0. The VT is 35mm below HP. Draw the projection of line and find the inclination with the reference planes. Also locate the HT. **(10)**

OR

Q.4 A line AB has its end point A 10mm above the HP. Distance of projectors between its ends A and B is 70mm. Distance of projectors between its traces is 110mm. The elevation of the line is inclined at 45^0 to the XY line and its plan is inclined at 30^0 to the XY line. Draw the projections of the line; find its true length, inclination with HP and inclination with VP. Also locate its traces. **(10)**

Q.5 A rhombus ABCD has its diagonal AC = 80mm and BD = 50mm. The side AD of the plane is in HP and the plane makes an angle of 30^0 with the HP. Obtain the projections of the plane when side CD is in VP. Find inclination of the plane with VP. **(10)**

OR

Q.5 Draw the projections of a circle of 60mm diameter resting in the HP on a point A on the circumference if the plate is inclined at 30^0 to HP and the diameter AB makes 35^0 with the VP. Also find the inclination of the plate with VP. **(10)**

Q.6 A pentagonal pyramid of base 20mm and height 50mm has its triangular face in the VP with a shorter side inclined to the HP at 30^0. Draw its projections. **(10)**

OR

Q.6 A one of base diameter 40mm and axis length 50mm is kept on the HP on its base. It is cut by an Auxiliary inclined plane inclined at 45^0 to the HP and passes through the point on the axis 30mm above the base. Draw front view, sectional T.V., sectional side view and true shape of the section. **(10)**

* * * * *